PT | Laser Process Tools | MFU Welding Tool

Permanova MFU Motorized Focusing Unit

The Permanova Motorized Focusing Unit is developed to provide a good solution for applications requiring a flexible focus position, for instance due to product geometries. The Motorized Focusing Unit moves the focus plane with an electrical drive which allows adjustments of the focus between two welds on the same component.

- Adjustable within -6 to +20 mm around the design focal length
- Available with focal lengths 120 mm, 160 mm, 200 mm, 250 mm, 300 mm, 400 mm or 500 mm
- Continuous temperature measurements
- Compatible with all Permanova WT^{03} series
- Adjusted via the robot control

PERMANOVA
Lasersystem ab
Laser is our passion

Focus Position

There is a mechanical reference edge from where the focal position is measured. The distance from the reference edge to the focus spot agrees with the design focal length, DFL, (120, 160 or 200 mm) when the focusing unit is in its nominal position, and if the beam does not pass a cover slide. If a cover slide is present the focus spot is shifted, the distance from lens to focus is increased. With a standard 3 mm thick cover slide from Permanova the focus plane is moved 1 mm. For instance, a system with DFL = 120 mm, a 3 mm cover slide and in its nominal position, has its focus plane 121 mm from the reference edge.

Communication

The robot sends a digital trigger signal (high, 24 V, named TRIGG) to the focusing unit. The focusing unit responds with signal HANDSHAKE high and waits for the robot to set its TRIGG low. The blue diode on the MFU should light up. Then the focusing unit reads the analogue signal (0-10 V, 0.25 V/mm) and moves up or down depending on the given value. When it has reached the requested position it sets the HANDSHAKE low and the blue diode is off.

Temperature measurements

The unit continuously measures the temperature of the circuit board and the aluminium housing. At each measurement the white diode is toggled. When the temperature is too high, the unit first raises a warning by turning the yellow diode on. If the temperature reaches even higher, an alarm is set and the following happens:

1. Green diode is switched off
2. Red diode is lit
3. ALL OK output signal is set to 0V
4. If the alarm is due to high housing temperature, the orange diode is lit as well.

To reset the alarm, perform manual homing as indicated below.

Temperature alarm limits:

Housing warning	35°
Board temp warning	45°
Housing alarm	50°
Board temp alarm	55°

The housing temperature is sent out as an analogue signal after each measurement.

Manual Homing

Set the HOME-signal high, the MFU responds with HANDSHAKE high and then waits for the HOME signal to go low again. When it is low, a homing run is performed. If it was successful the HANDSHAKE is put back into the low state and normal operations are resumed.

Technical Data, Permanova MFU - Motorized Focusing Unit

Laser wave length	1030-1070 nm
Laser Power	up to 6 kW (on request 10 kW)
Focal lens	
Focal length	120 mm, 160 mm, 200 mm, 250 mm, 300 mm, 400 mm, or 500 mm -6/+20 mm motorized
Lens diameter	50 mm

Data may be changed without notice

(mm)

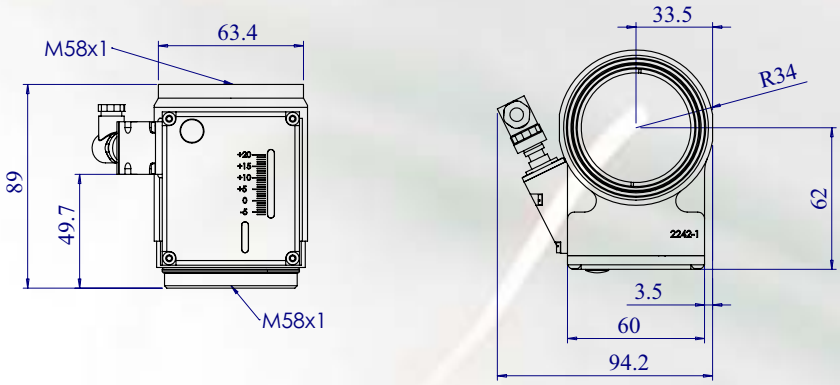

Permanova Lasersystem AB • Krokslätts Fabriker 30 • SE-431 37 Mölndal • Sweden
Phone: +46 31-706 1980 • Fax: +46 31-86 46 12 • info@permanova.se • www.permanova.se

October 2008

PERMANOVA Lasersystem ab
Laser is our passion